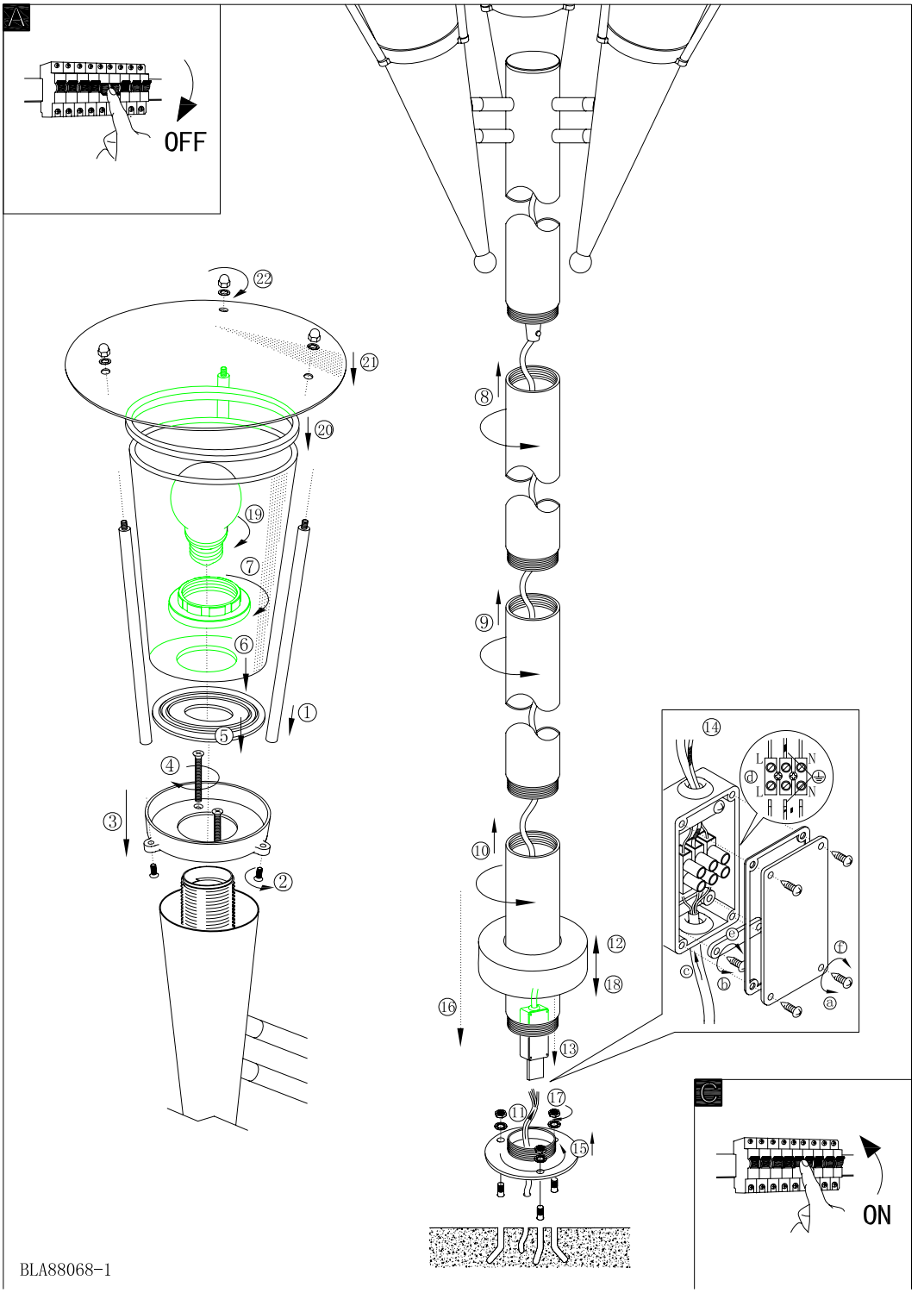
A
OFF
22
21
20
19
7
6
5
1
4
3
2
8
9
10
12
18
16
13
14
L
N
d
L
N
c
b
f
a
17
11
15
C
ON

BLA88068-1